WR 6060-B

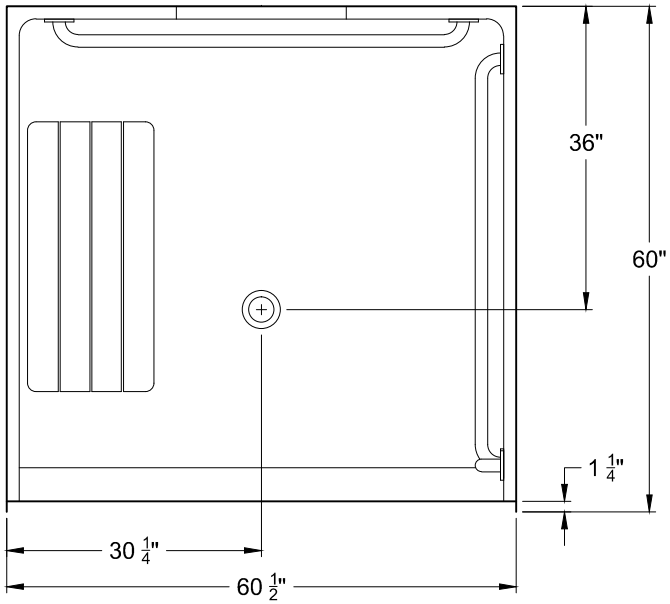
36"
60"
1 1/4"
30 1/4"
60 1/2"

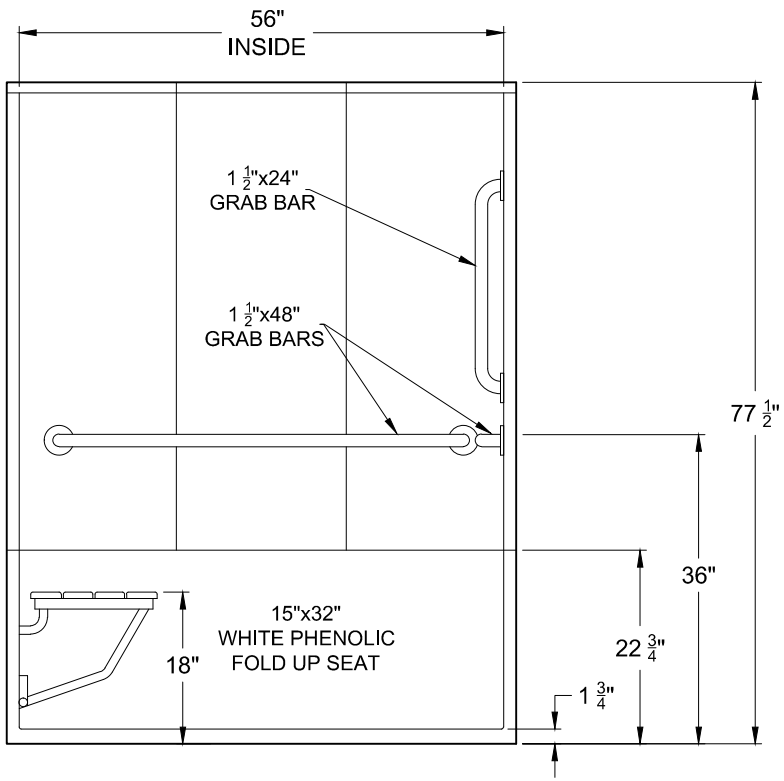
56"
INSIDE
1 1/2"x24"
GRAB BAR
1 1/2"x48"
GRAB BARS
77 1/2"
36"
22 3/4"
1 3/4"
15"x32"
WHITE PHENOLIC
FOLD UP SEAT
18"

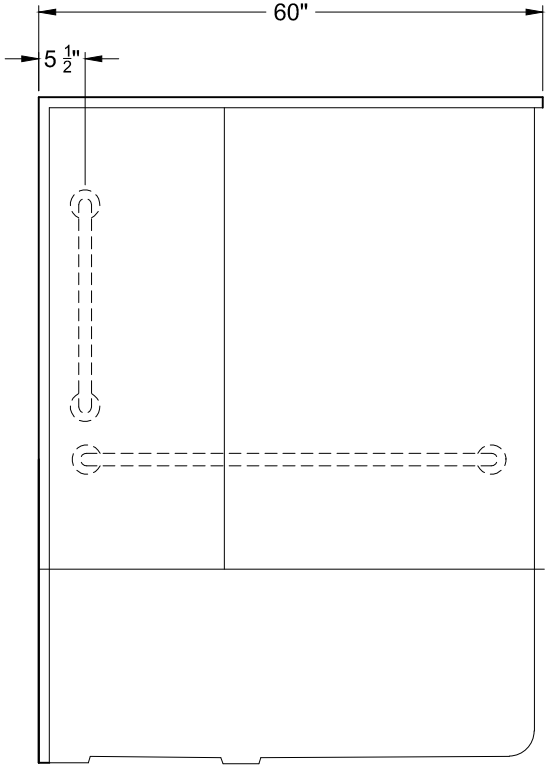
60"
5 1/2"